© 2013 Moleskine SpA - All right reserved.

DESSERT JOURNAL: Designs

dessert · occasion

date

design

description (ingredients, decorations ...)

section view

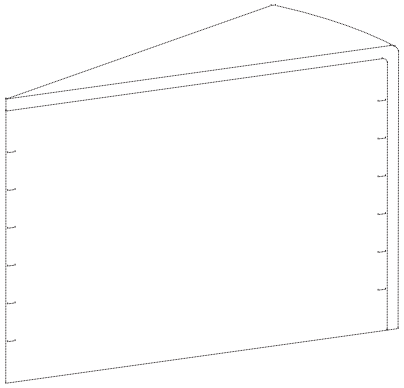

top view

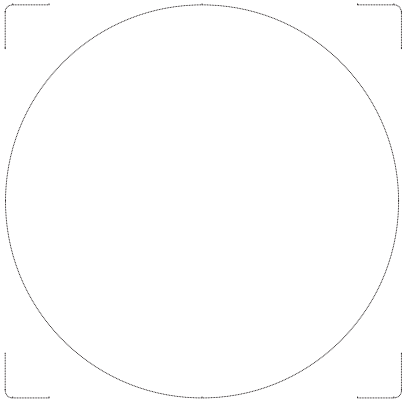

side view

dessert · occasion

date

design

description (ingredients, decorations ...)

section view

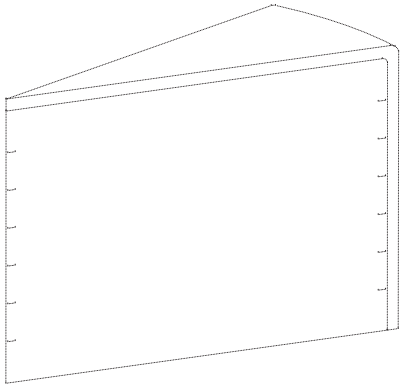

top view

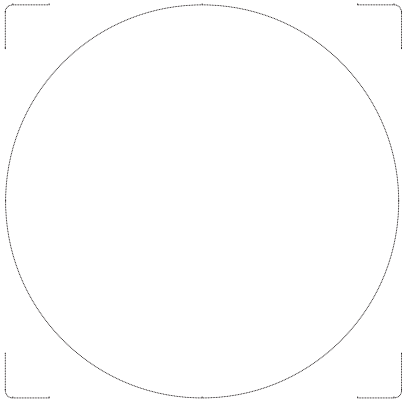

side view

MOLESKINE® MSK

© 2013 Moleskine SpA - All right reserved.

DESSERT JOURNAL: Designs

dessert · occasion

date

design

description (ingredients, decorations ...)

section view

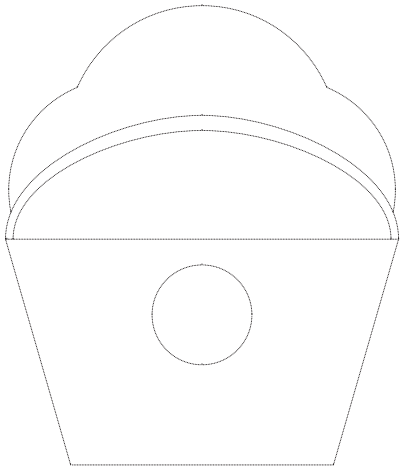

top view

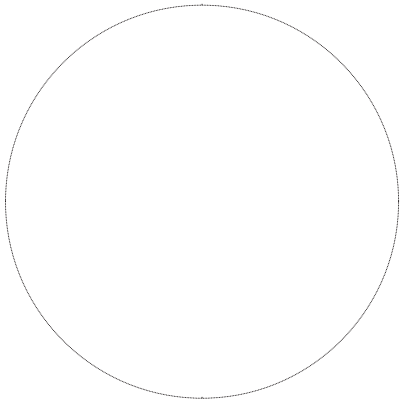

dessert · occasion

date

design

description (ingredients, decorations ...)

section view

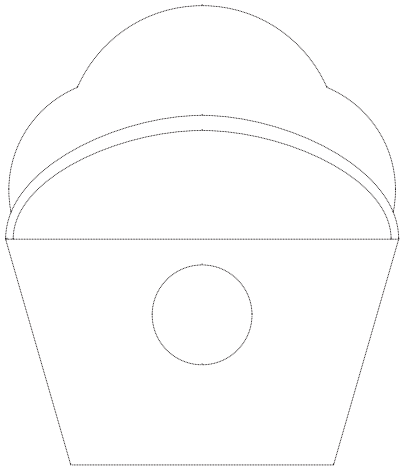

top view

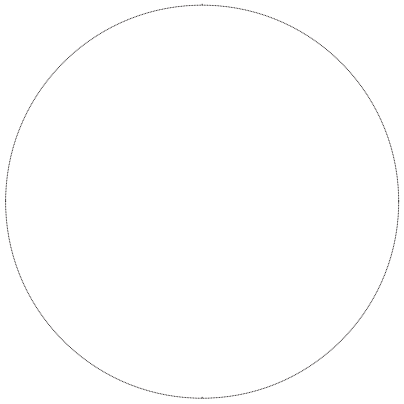

MOLESKINE® MSK

© 2013 Moleskine SpA - All right reserved.

DESSERT JOURNAL: Designs

dessert · occasion

date

design

description (ingredients, decorations ...)

dessert · occasion

date

design

description (ingredients, decorations ...)

MOLESKINE® MSK